Hitachi Power Tools

LIST NO. G826

ELECTRIC TOOL PARTS LIST

■ CORDLESS KIT

2005 · 5 · 20

Model KC 18DMR

(E1)

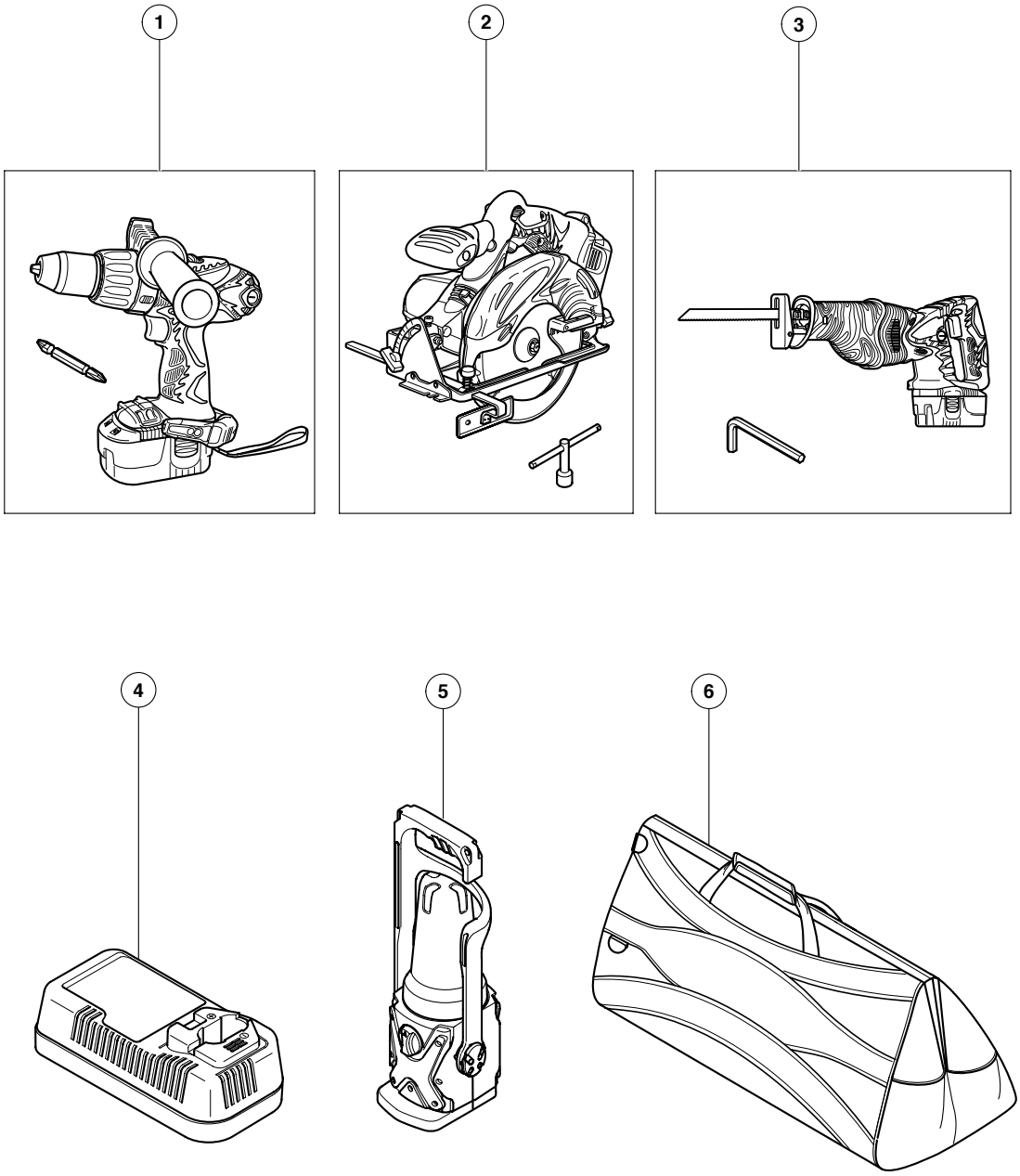

PARTS

	ITEM NO.	CODE NO.	DESCRIPTION	NO. USED	REMARKS	
*	1		MODEL DV 18DMR CORDLESS IMPACT DRIVER DRILL	1		
*	1		MODEL DS 18DMR CORDLESS DRIVER DRILL	1		
	2		MODEL C 18DMR CORDLESS CIRCULAR SAW	1		
	3		MODEL CR18DMR CORDLESS RECIPROCATING SAW	1		
*	4		MODEL UC 24YJ CHARGER	1		
*	4		MODEL UC 24YFA CHARGER	1		
	5		MODEL UB 18DL CORDLESS LANTERN	1		
	6	324-585	BAG	1		

* ALTERNATIVE PARTS

Printed in Japan 5 – 05
(050520N)